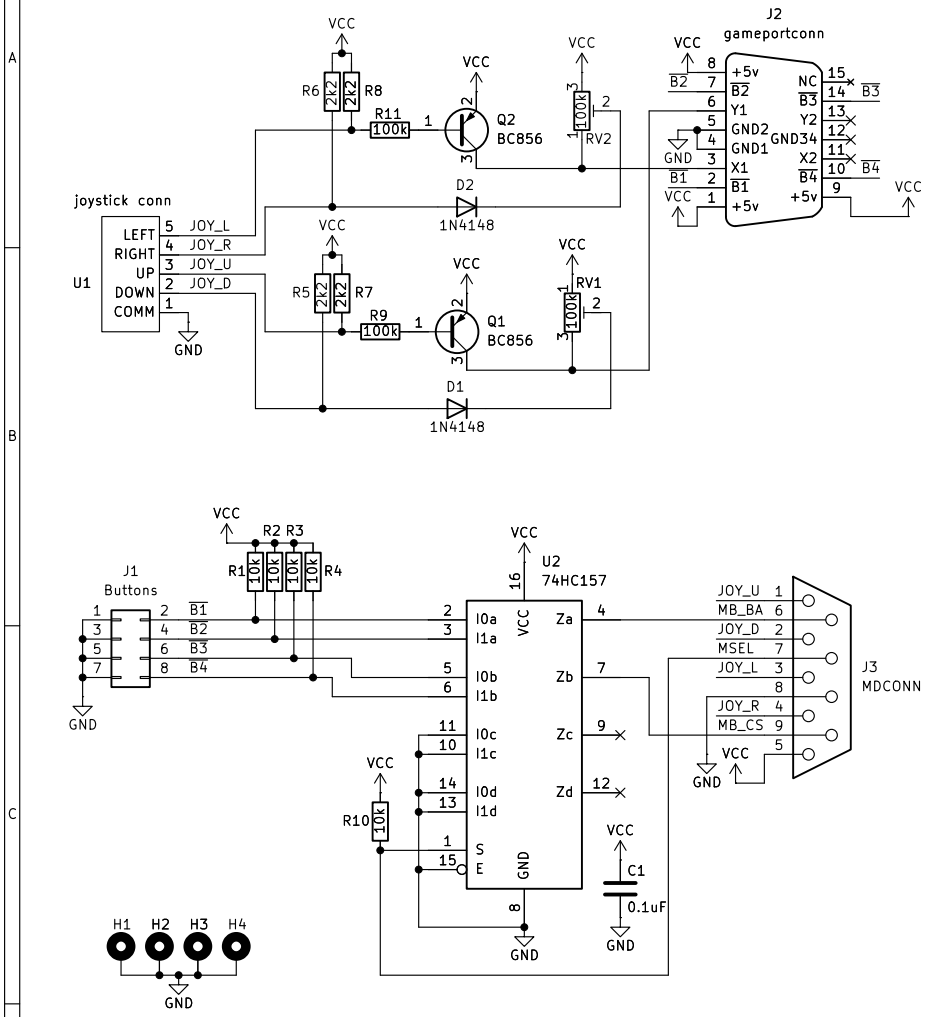

Sheet: /
File: joystick.kicad_sch

Title: digital gameport arcade joystick

Size: A5	Date: 2026-05-05	**Rev: 1**
KiCad E.D.A. 10.0.1		Id: 1/1